EFFLUENT TREATMENT AND ITS COST FOR THE SYNTHANE COAL-TO-S.N.G. PROCESS

Joseph P. Strakey, Jr., Albert J. Forney, William P. Haynes
U. S. Bureau of Mines, 4800 Forbes Avenue, Pittsburgh, Pa.

Kenneth D. Plants
U. S. Bureau of Mines, P. O. Box 880, Morgantown, W. Va.

Introduction

A full scale coal gasification plant will convert coal containing large amounts of ash and sulfur into 250 x 10^6 scfd of S.N.G. which can be utilized in an environmentally-acceptable manner. The gasification plant itself will require extensive controls to prevent the release of large quantities of pollutants to the environment. The SYNTHANE process (1) is one of four new coal-to-S.N.G. processes that is proceeding to the large pilot plant scale (it will gasify 75 tons of coal/day). One of the principal objectives of the pilot plant is to determine the environmental aspects of the process and to develop the necessary treatment techniques. A complete and accurate accounting of the environmental aspects will await the operation of the pilot plant. In the study presented here, we have used the data collected in the small (20-40 lb./hr) gasifier to project the environmental impact of a full scale SNYTHANE plant and estimate the cost of controls. The gasifier is the same as the large gasifier except in scale and the effluents should be a reasonable representation of those to be expected from a full scale plant. The chars, tars, gases, and water from this gasifier have been extensively analyzed and reported (2).

Gaseous Effluents

Coal storage and preparation would be the same as that for a 1800 MWe coal-fired power plant and no special problems are anticipated. In the 75 ton/day SYNTHANE pilot plant, the coal pulverizer is swept with a clean hot flue gas from an oil-fired furnace to dry and transport the coal. In a full scale plant, the mill could be swept with heated air. A baghouse will remove particulates from the discharge, and no increase in emissions would result.

The lock hoppers used to introduce the coal into the system at 1000 psig are pressurized with CO_2 recovered from the acid gases. A Stretford plant removes H_2S from the acid gases in the 75 ton/day pilot plant so the CO_2 is relatively pure. If a Claus plant is used in place of the Stretford, the CO_2 will contain sulfur compounds and the lock hopper gas should be vented through the boiler in order to convert all the sulfur compounds to SO_2. If the lock hoppers are vented through the boiler or directly to the atmosphere, filters would be used to remove coal dust.

Pretreatment of the coal when required, is done at pressure and the offgas is mixed with the product gas from the gasifier and no effluents are created. Char is withdrawn from the bottom of the gasifier and is passed through a char cooler where the temperature is lowered from 1800° F to 600° F by a water spray. The steam generated here is used in the shift reactor, and no gaseous effluent results. The char is brought to atmospheric pressure in lock hoppers pressurized with steam. The char is low in volatile matter so no problems are anticipated in handling the lock hopper steam.

No gaseous effluents are created in the gas cleanup section of the plant or in the shift reactor.

The acid gases removed in the hot carbonate system are treated in the Stretford or Claus plant and the treatment of the effluents is discussed below. Final sulfur cleanup and methanation introduce no gaseous effluents.

The major gaseous sulfur effluent results from the combustion of the char produced in the gasifier. In the SYNTHANE process, the amount of char produced is just sufficient to supply the energy needed for steam generation so a "balanced" condition results. This balance point occurs when the carbon conversion upon gasification is approximately 65%. The sulfur content, and analyses, of four different coals and the chars produced from them, is shown in Table 1. Sulfur content of the chars varies from 0.2 to 1.8% S. These data were selected from runs where the carbon conversion was near 65%. For the high sulfur eastern coals, combustion of the char will result in SO_2 emissions in excess of present emission standards.

In the control strategy presented here, the char-fired boiler is also used as an incinerator to dispose of sulfur bearing streams produced in other parts of the plant. One such stream is produced in the water treatment plant where the ammonia stripping step produces an offgas containing CO_2, H_2S, and HCN. This offgas is incinerated in the boiler where the H_2S is converted to SO_2 and the very small amount of HCN is converted to H_2O, CO_2, N_2 and perhaps some NO_x. The sulfur in this offgas is small in proportion to the sulfur in the char, ranging from 4 to 11% of the char sulfur for the different coals.

The tailgas from the Stretford or Claus plant is also incinerated in the char-fired boiler. The Stretford tailgas contains only very small quantities of sulfur compounds and incineration of this stream serves mainly to prevent objectionable ground level concentrations of CO_2.

The SO_2 emissions for the Stretford case are shown in the first row of table 2 in pounds of SO_2 per million Btu's of char fired. Also shown is the percent removal of SO_2 needed to meet the New Source Performance Standard of 1.2 lb. of SO_2 per million BTU. The high sulfur eastern coals will require SO_2 scrubbing of 36 and 67% No scrubbing is required for the western coals.

Another option which was considered is the combustion of the tars (see table 1) produced in gasification along with the char. These tars can furnish from 16 to 24% of the necessary heat; their sulfur content varies from 1.1 to 2.7%. In this case, the char would be gasified to a higher carbon conversion to maintain balanced operation. Emissions were calculated for this case by assuming equal percentage gasification of the C,H,N,O,S to give the desired reduction in char mass and heating value. The emissions are shown in the second row of table 2. For the Illinos coal, the percent removal of SO_2 needed is increased from 36 to 52% but is almost unchanged for the western Kentucky coal. The western coals still require no SO_2 scrubbing.

Another option is to desulfurize this tar before combustion. This has been done for one SYNTHANE tar in the Bureau's SYNTHOIL pilot plant (3,4). The sulfur content was reduced from 1.8% to 0.56% when hydrodesulfurized under relatively mild conditions of 425° C and 2000 psi. Based on experience with coal tars, it is believed that the sulfur levels could be reduced to 0.1% by operating at 450° C and 4000 psi. Assuming this fractional sulfur removal, the emissions have been calculated for the case of combustion of char plus desulfurized tar including the sulfur from the ammonia stripping step. The results are shown in the third row of table 2. Only a relatively small decrease in emissions over the case of char combustion alone results and the added cost of the desulfurizing step would not be justified.

A Claus plant could be operated in place of the Stretford process. The feed gas to the Claus plant would contain about 4% H_2S for the high sulfur coals. While operation with such a lean gas is not normal practice, plants have operated with as low as

1.9% H_2S (5) with recoveries of 70%. It is unlikely that a Claus plant could be used with the low sulfur western coals. To compare the emissions for this case, a sulfur recovery efficiency of 80% was assumed with the tailgas being incinerated in the boiler. A significant increase in emissions results as shown in the fourth row of table 2. Approximately 80% removal efficiency is required for the SO_2 scrubbing system which is well within the realm of present technology. Emissions are also shown for the case where the tars are combusted along with the char.

The recovery of H_2S from the acid gases could be omitted entirely and the sulfur could be removed as SO_2 from the boiler after incineration. This would require removal efficiencies in excess of 90% for the eastern coals, as shown in table 2, which would not be practical, but for the western coals this is a definite possibility. For the western coals, the removal efficiencies needed would be 70 and 86%. Also shown in table 2 are the emissions for combustion of the tar along with the char. The NO_x emission limits can be met by proper design of the boiler using techniques such as tangential firing and overfire air.

An estimate of the cost of air pollution controls can be made. It has been assumed here that the Stretford or Claus plant is part of the basic coal gasification process even though it is actually included to reduce emissions and its cost has not been included. The cost of the SO_2 scrubbing system is taken to be equivalent to $35/KW based on the boiler size. The char fired boiler would have an equivalent generating capacity of about 514 MWe.

For the worst case (W. Kentucky coal), conventional lime or limestone scrubbing of nearly all of the flue gas would be needed to achieve the removal efficiency of 67% with the Stretford plant and 80.8% with the Claus plant. The capital cost would then be $17,987,000. The operating cost, at 2 mills/kwh (a moderate to high number) would be $8,140,000 per year, or $ .0987 per thousand ft^3 of S.N.G. If Illinois No. 6 coal is used, scrubbing would only be necessary on about half of the boiler output if the Stretford process is used. The cost would be correspondingly reduced.

Solid Effluents

The major solid effluents will be sulfur, ash, and lime sludge. A 250 x 10^6 scfd plant gasifying one of the eastern coals will produce about 24 ton/hr of elemental sulfur from the Stretford plant. Although it is salable in the near future, this situation is unlikely to continue and disposal methods such as returning the sulfur to the worked-out mine may ultimately be necessary.

All of the coal ash will end up as particulates in the char fired boiler. Particulate emissions here are quite high. The char is both high in ash and low in heating value. The particulate emissions are shown below along with the percent removal needed to meet the New Source Performance Standard of 0.1 lb of particulate per million BTU.

Particulate Emissions from Char fired Boiler

	Lb ash/10^6 BTU	% Removal
Illinois No. 6	24.52	99.59
Wyoming	64.20	99.84
W. Kentucky	28.26	99.65
Lignite	25.97	99.61

Removal efficiencies of 99.6 to 99.8% will be needed. This will require the best available technology in precipitators or venturi scrubbers. The recovered ash could also be returned to the coal mine.

A lime sludge will be produced in the SO_2 scrubbers and in the lime leg of the ammonia stills. The total volume will be about 17 tons/hr when Illinois No. 6 coal is used. It may be possible to reduce the volume by using the sludge from the ammonia stills in the SO_2 scrubbers. The only proven disposal method at present is ponding. Since the gasification plants will be mine-mouth plants, adequate land area for a pond should be available.

Some spent catalysts and sorbents will be generated. Spent shift catalyst and sponge iron, used in final sulfur cleanup, can be disposed of by burial. The activated carbon also used in final sulfur cleanup will also require periodic replacement and the used carbon could be returned to the gasifier. The Raney nickel and the second stage conventional methanation catalyst contain a high proportion of nickel, and we are currently investigating techniques to recover the nickel from spent catalyst.

Liquid Effluents

The water and steam flows for a 250 x 10^6 ft.^{3}/day SYNTHANE plant are shown in figure 1. These flows are based on the design for the 75 ton/day pilot plant. A total of 1.25 lb of steam/lb coal is used in the pretreatment and gasification of the coal. A steam decomposition of 40% in the gasifier has been assumed. Most of the water is condensed in the scrubber along with several contaminants. A portion of the water recovered in the knock-out trap after the shift converter is sprayed into the char cooler to reduce the char temperature from 1800 to 600° F. The steam generated is then blended with the shift reactor feed gas.

No contaminated effluents are created in the purification and methanation steps of the process. The hot potassium carbonate (Benfield) acid gas scrubbing process can be operated at a net steam deficit. An analysis of the water produced in the methanation reaction (133,000 lb/hr) is shown below. It is relatively uncontaminated and should be suitable as a boiler feed water. The high iron concentration is a result of reaction with the carbon steel piping in the pilot plant.

Methanation Byproduct Water Analysis [1/]

pH	5.4
Suspended solids	47
Phenol	0.003
COD	39
Ca	8
Mg	0.1
Fe	25
HCO_3	23

The water collected downstream of the gasifier in the scrubber-decanter requires extensive treatment. The condensates collected from the small SYNTHANE gasifier (20-40 lb/hr) have been analyzed (2) and the results are shown in the following table:

[1/] mg/l except pH

Byproduct water analysis from SYNTHANE gasification of various coals, mg/l (except pH)

	Coke plant	Illinois No. 6 coal	Wyoming subbituminous coal	Illinois char	North Dakota lignite	Western Kentucky coal	Pittsburgh seam coal
pH	9	8.6	8.7	7.9	9.2	8.9	9.3
suspended solids	50	600	140	24	64	55	23
Phenol	2,000	2,600	6,000	200	6,600	3,700	1,700
COD	7,000	15,000	43,000	1,700	38,000	19,000	19,000
Thiocyanate	1,000	152	23	21	22	200	188
Cyanide	100	0.6	0.23	0.1	0.1	0.5	0.6
NH_3	5,000	[1] 8,100	9,520	2,500	7,200	10,000	11,000
Chloride	-	500	-	31	-	-	-
Carbonate	-	[2] 6,000	-	-	-	-	-
Bicarbonate	-	[2] 11,000	-	-	-	-	-
Total sulfur	-	[3] 1,400	-	-	-	-	-

[1] 85 percent free NH_3.

[2] Not from same analysis.

[3] $S^=$ = 400
$SO^=$ = 300
$SO_4^=$ = 1,400
S_2O_3 = 1,000

Approximately 60% of the coal nitrogen is converted to ammonia. The concentration of cyanide is notably small (0.6 mg/l or lower). Thiocyanates are also low compared to coke plant weak ammonia liquor. There is a wide variation in phenols for the different coals, from 1,700 to 6,600 mg/l. The water condensed after the shift reactor would be similar in character but more dilute; it would contain only about 9 mg/l of phenol.

A treatment process was developed to serve as the basis for an economic estimate. It is shown in figure 2. The flows and amounts are based on an Illinois No. 6 coal with a nominal 2000 mg/l of phenol and 12,000 mg/l of ammonia. The use of other coals will undoubtedly change these quantities but should not greatly affect the cost estimate.

The ammonia water from the scrubber decanter is first fed to ammonia stills where free ammonia is released in the free ammonia leg and the fixed ammonia is liberated in the fixed leg after reaction with milk of lime. Heat is supplied to the stills by adding live steam at 15 psig. The tops of the stills are equipped with dephlegmators which cool the gas to 185° F and condense a portion of the steam which acts as reflux.

The ammonia leaving the stills proceeds to a washer column where it is cooled to 90° F and washed with a water spray which reacts with the NH_3 to produce NH_4OH. This, in turn, removes CO_2, H_2S, and HCN. The wash solution passes to a dissociator where it is heated to drive off the acid gases. The acid gases are washed with incoming feed water to recover the NH_3. The purified ammonia product is absorbed in water to produce a 30% aqueous ammonia product for sale. An anhydrous ammonia product could also be produced. Lime sludge consisting of unreacted components in the lime and the calcium salts formed in the ammonia stills is removed as a slurry from the lime leg and pumped to the pond for the SO_2 scrubber.

The stripped water is withdrawn from the base of the fixed ammonia leg and cooled to 100° F in an air cooled heat exchanger and stored for 48 hours in a holding tank to permit separation of any remaining tars. Water from the holding tank is combined with water from the knockout drum following the shift converter for feed to the aeration tanks. Antifoam and phosphoric acid (biological nutrient) are added and sulphuric acid is used as needed to control the pH at 8.0 and temperature is adjusted to 90° F.

Biological oxidation is used to oxidize phenols, other organics, cyanides, and thiocyanates. A similar system has been used by Bethlehem Steel Co. at its Bethlehem, Pa. plant (6) where phenols are reduced to as low as 0.1 mg/l and thiocyanates are reduced by an average of 70%. This plant has been operating for over 10 years. In the aeration tanks, surface aerators supply the necessary oxygen. The water from the aerators flows to clarifiers where the sludge is separated and returned to the aerators. A portion of the sludge is wasted by filtering the clarifier underflow and adding the waste sludge to the coal fed to the gasifiers.

The overflow from the clarifier containing 0.2 mg/l of phenol and less than 50 mg/l of NH_3 flows to polishing towers, where gasifier char removes the remaining phenols. The spent char is filtered and returned to the gasifier. The treated water can then be used as cooling tower make-up. Blowdown will, of course, ultimately result in discharge to a stream.

The design of this water treatment process is based on related commercial experience such as the Bethlehem Steel water treatment plant. We are currently investigating several aspects of the process with the condensate from the small SYNTHANE gasifier and the results will be reported at a later date. More research is needed in the area of water treatment to adequately define the effluents from these treatment processes.

The economic evaluation of this process based on early 1972 costs yielded a total construction and total plant cost of $11,098,900. The total incremental investment including interest during construction and working capital is $13,185,500. The annual operating cost with a 90% operating factor is $3,019,700. Allowing a credit of $35 per ton of NH_3 produced, the net annual operating cost is $1,173,500. This is equivalent to $0.0142 per thousand ft^3 of S.N.G. produced.

Conclusion

In summary, this preliminary study indicates that the gaseous, solid, and liquid wastes from a full-scale SYNTHANE plant can be controlled in an acceptable manner at an acceptable cost. The cost of controlling the gaseous pollutants is estimated at $0.0987 per 1000 ft^3 of S.N.G., and that of the water pollutants is $0.0142 per 1000 ft^3 of S.N.G.

TABLE 1. - Coal, Char, and Tar Analyses
Weight percent

	Illinois No. 6	Western Kentucky	Wyoming Sub-Bituminous	North Dakota Lignite
COALS:				
Moisture	7.8	4.3	10.4	21.1
Volatile Matter	37.7	34.6	35.3	32.3
Fixed Carbon	43.2	44.5	36.4	38.3
Ash	11.3	16.6	17.9	8.3
Hydrogen	5.3	4.7	5.0	5.7
Oxygen	15.6	10.9	25.1	32.9
Carbon	63.2	62.7	50.7	51.3
Nitrogen	1.1	1.2	0.7	0.7
Sulfur	3.5	3.9	0.6	1.1
CHARS:				
Moisture	1.0	0.9	0.6	1.4
Volatile Matter	3.6	4.6	3.1	8.8
Fixed Carbon	69.1	65.4	47.8	63.2
Ash	26.3	29.1	48.5	26.6
Hydrogen	1.0	1.0	0.8	1.1
Oxygen	1.3	0.9	1.1	2.6
Carbon	69.9	66.5	49.1	68.3
Nitrogen	0.5	0.7	0.3	0.3
Sulfur	0.9	1.8	0.2	0.5
Carbon Conversion,%	65.5	68.4	68.3	64.0
LB Char/LB Coal	0.310	0.437	0.363	0.250
TARS:				
Hydrogen	6.6	6.0	7.2	7.7
Oxygen	6.6	6.9	8.5	6.4
Carbon	83.0	84.0	81.9	83.8
Nitrogen	1.1	1.4	1.2	1.0
Sulfur	2.7	1.7	1.2	1.1
LB Tar/LB Coal	0.051	0.045	.038	0.025

TABLE 2. - SO_2 Emissions for Various Control Options

LB SO_2 / 10^6 BTU

[ ] = percent removal required

STRETFORD PLANT	Ill. #6	Wyoming	W. Kentucky	Lignite
Char	1.87 [35.9%]	0.57 [0%]	3.63 [67.0%]	1.04 [0%]
Char + Tar	2.30 [52.0%]	0.77 [0%]	3.43 [66.8%]	1.10 [0%]
Char + Des. Tar	1.51 [27.0%]	0.47 [0%]	3.11 [63.4%]	0.89 [0%]
CLAUS PLANT				
Char	5.45 [78.0%]	1.24 [3.6%]	6.24 [80.8%]	2.49 [51.7%]
Char + Tar	5.88 [81.2%]	1.45 [23.4%]	6.03 [81.1%]	2.55 [55.5%]
No H_2S Removal				
Char	19.78 [93.9%]	3.96 [69.7%]	16.64 [92.8%]	8.28 [85.5%]
Char + Tar	20.21 [94.5%]	4.16 [73.3%]	16.44 [93.1%]	8.34 [86.4%]

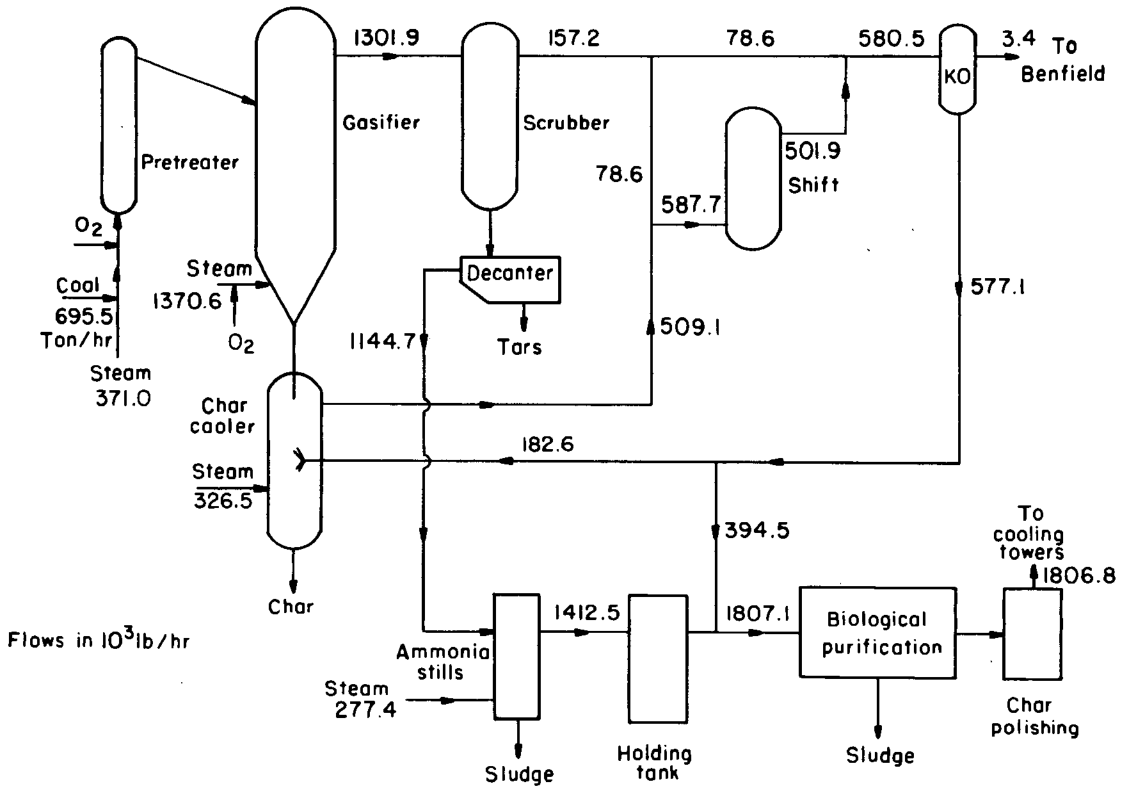
Pretreater
O2
Coal
695.5
Ton/hr
Steam
371.0
Gasifier
Steam
1370.6
O2
1301.9
Scrubber
157.2
78.6
78.6
587.7
Shift
501.9
580.5
KO
3.4 To
Benfield
577.1
Decanter
Tars
1144.7
509.1
Char
cooler
Steam
326.5
Char
182.6
394.5
Ammonia
stills
Steam
277.4
Sludge
1412.5
Holding
tank
1807.1
Biological
purification
Sludge
Char
polishing
To
cooling
towers
1806.8

Flows in 10^3 lb/hr

FIGURE 1 - Water and steam flows - 250×10^6 SCFD SYNTHANE plant.

L-13756

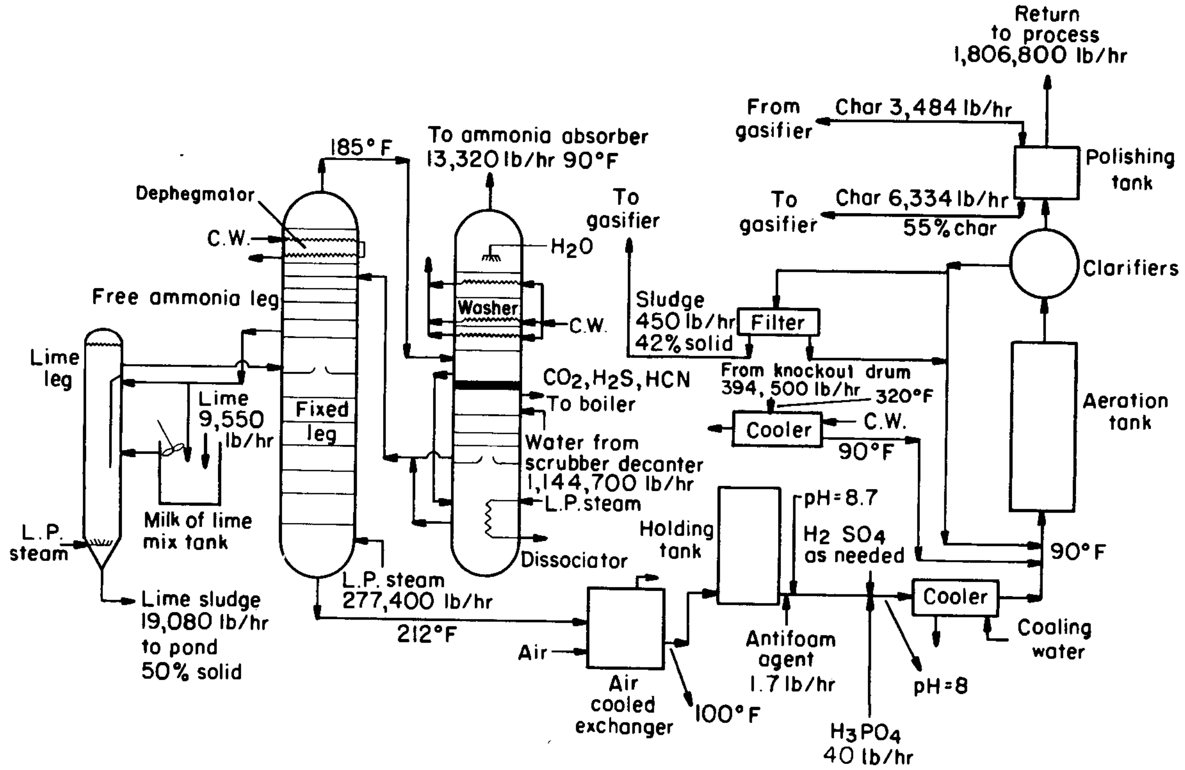
Return
to process
1,806,800 lb/hr
From gasifier
Char 3,484 lb/hr
Polishing tank
To gasifier
Char 6,334 lb/hr
55% char
Clarifiers
185° F
To ammonia absorber
13,320 lb/hr 90°F
Dephegmator
C.W.
To gasifier
H_2O
Free ammonia leg
Washer
C.W.
Sludge
450 lb/hr
42% solid
Filter
Lime leg
From knockout drum
394, 500 lb/hr
320°F
Lime
9,550
lb/hr
Fixed leg
CO_2, H_2S, HCN
To boiler
C.W.
Cooler
Aeration tank
90°F
Water from
scrubber decanter
1,144,700 lb/hr
L.P. steam
pH=8.7
Holding tank
Milk of lime
mix tank
H_2SO_4
as needed
90°F
L.P. steam
Dissociator
L.P. steam
277,400 lb/hr
Cooler
Lime sludge
19,080 lb/hr
to pond
50% solid
212°F
Air
Antifoam
agent
1.7 lb/hr
Cooling
water
Air
cooled
exchanger
100°F
pH=8
H_3PO_4
40 lb/hr

FIGURE 2 – Flow sheet, water treatment.

L-13757